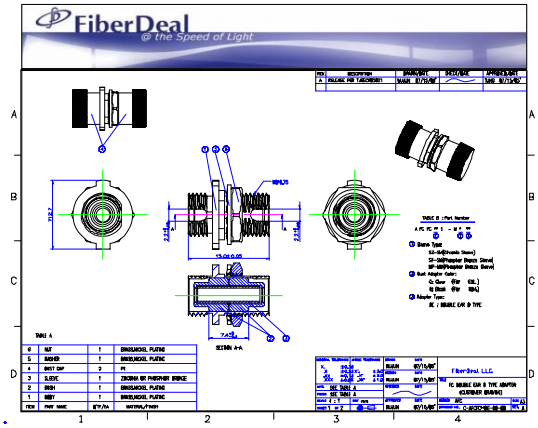
FiberDeal
@ the Speed of Light
SECTION A-A
TABLE A
FiberDeal LLC.
FC MALE CAN D TYPE ADAPTER
(CUSTOMER DRAWING)

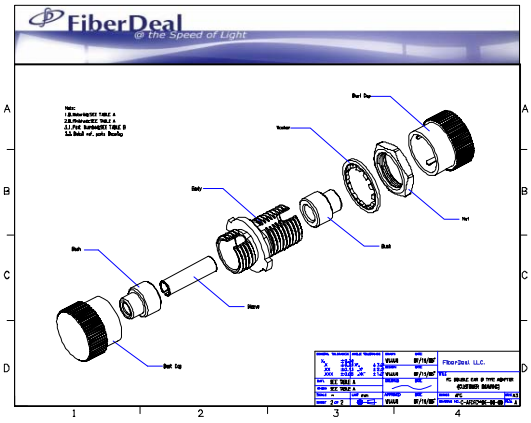
FiberDeal
@ the Speed of Light
Note:
Nut Cap
Washer
Body
Nut
Bush
Sleeve
Nut Cap
FiberDeal LLC.
FC MALE CAN D TYPE ADAPTER
(CUSTOMER DRAWING)